umbratek

# ADRA ACTUATOR

## TECHNICAL DATA

### HR / DD Type

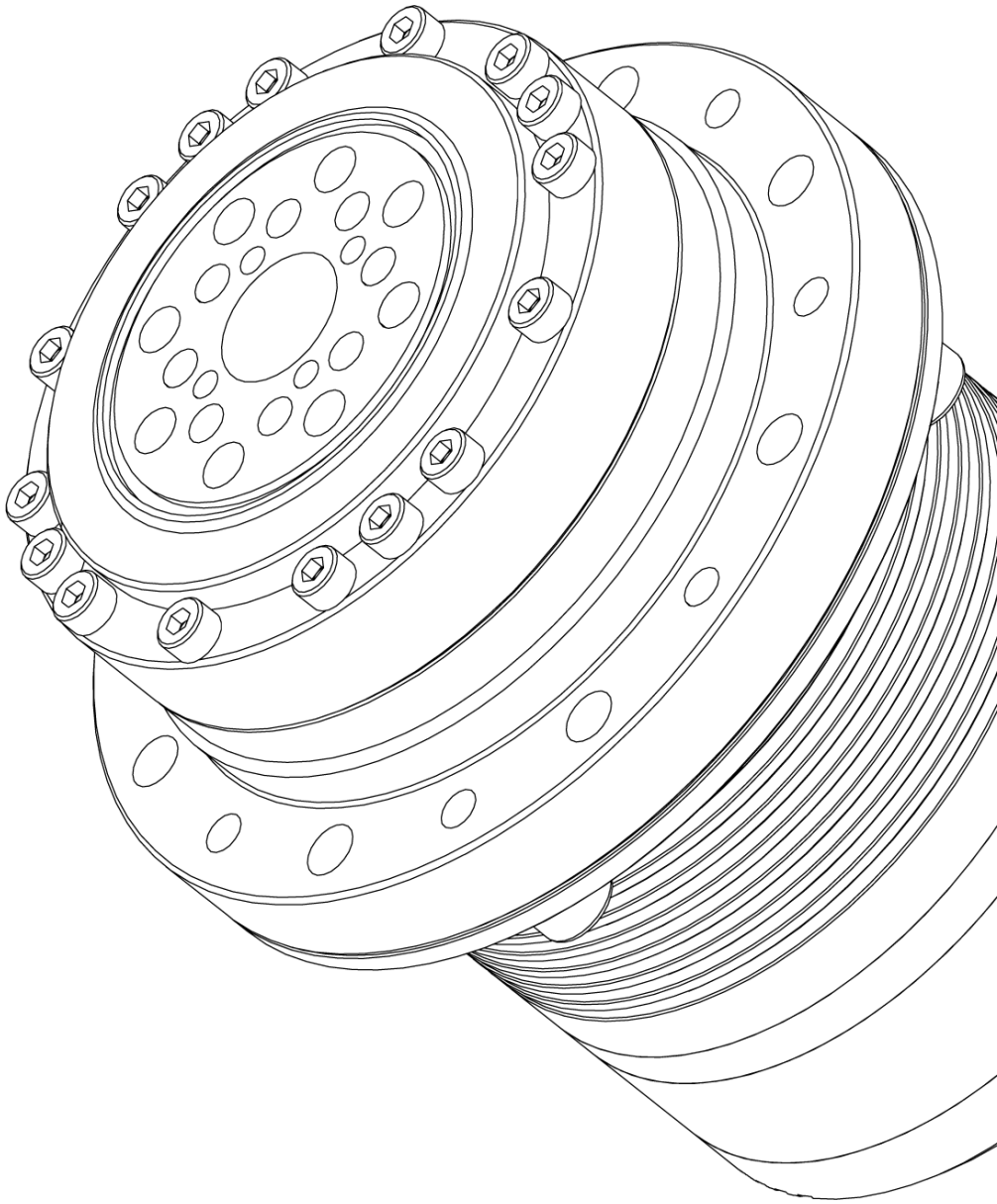

DATE: APR 2022

VER: 0.2.1

# Features

## Characteristics

High precision, zero backlash, complete models

Hollow design

Optional light weight, high rigidity or compact harmonic reducer

Drive, brake, servo motor, reducer integrated design (Customizable)

## Umbratek Assistant

Online parameter setting

Calibration encoder

Test of each mode

Upgrade firmware online or offline

Real-time graphical curve and data display

## Data Bus (RS485/CAN)

Up to 32 actuators can be connected on a Bus

RS485 up to 12us communication response time, up to 11.25Mbps communication rate (adjustable)

RS485 supports broadcast mode at the same time to send instructions to control multiple actuators

RS485 can simultaneously obtain feedback data from multiple actuators in broadcast mode

CAN interface up to 1Mbps communication rate

## Development (open source)

SDK (Python, C/C++, C#)

ROS, ROS2

Arduino SDK

STM32 SDK


© 2022 Umbratek All Rights Reserved.

# Selection and Specification

## HR Series Model Rule

HR - A - 056 - 035 - 100 - R N - H B - L

- Reducer: S Standard - High Strength; L Lightweight - Aluminum; C Compact / Slim
- Brake: B Brake; N No Brake
- Shaft: H Hollow; S Solid
- Encoder: P 19bit MultiTurn ABS; Q 19bit SingleTurn ABS; N 16bit MultiTurn ABS; O 16bit SingleTurn ABS
- Interface: R RS485 - High Speed; C CAN - 2.0B
- Ratio: 30 50 80 100 120 160 (Please see the selection)
- Torque (Max.): 12 ~ 420 N.m
- Motor Diameter: 55 ~ 142 mm
- Actuator Type: A Standard (Cup Reducer); B Short Type (Hat Reducer); T Torque Type
- Actuator Series: HR Harmonic Reducer Series

## DD Series Model Rule

DD - A - 055 - 005 - R N - H B - F

- Mounting Flange: F Flange; N No Flange
- Brake: B Brake; N No Brake
- Shaft: H Hollow; S Solid
- Encoder: P 19bit MultiTurn ABS; Q 19bit SingleTurn ABS; N 16bit MultiTurn ABS; O 16bit SingleTurn ABS
- Interface: R RS485 - High Speed; C CAN - 2.0B
- Torque (Max.): 0.1 ~ 5 N.m
- Motor Diameter: 55 ~ 142 mm
- Actuator Type: A Standard (Inner Rotor); B Slim (Outer Rotor)
- Actuator Series: DD Direct Drive Series


© 2022 Umbratek All Rights Reserved.

## HR-A056 Technical Data (L/S Type Flange Reducer)

| Ratio | 50:1 | | 80:1 | | 100:1 | |
|---|---|---|---|---|---|---|
| Reducer Type | Light Weight | High Strength | Light Weight | High Strength | Light Weight | High Strength |
| MAX Torque (N·m) | 18 | 18 | 23 | 28 | 28 | 35 |
| AVG Torque (N·m) | 6.9 | 9 | 11 | 14 | 11 | 14 |
| Rated Velocity (RPM) | 68 | | 43 | | 34 | |
| Inertia (kg·m$^2$) | 0.000014 | | | | | |
| Rated Current ($A_{RMS}$) | 2.3 | 2.6 | 2.0 | 2.4 | 1.9 | 2.3 |
| MAX Current ($A_{RMS}$) | 5.2 | 6.0 | 4.6 | 5.8 | 4.5 | 5.5 |
| Weight - Brake (g) | 790 | 990 | 790 | 990 | 790 | 990 |
| Weight - No Brake (g) | 695 | 895 | 695 | 895 | 695 | 895 |
| Size (mm) | Motor d56, Flange D73, Height H86, Hole 7 | | | | | |
| Power Voltage | Rated DC48V (Operating Range DC19-52V) | | | | | |
| Backup Battery | 16bit Encoder Battery DC3V, 19bit Encoder Battery DC3.6V | | | | | |
| Standby Current | Driver < 35mA, Encoder Battery < 2.9uA | | | | | |
| Pole Pairs | 7 | | | | | |
| Backlash | ±0.007° (±25 Arcsec) | | | | | |
| Encoder & Resolution | Multi-turn Absolute Magnetic Encoder, 65536 x Ratio (16bit) / 524288 x Ratio (19bit) Pulse/Rev. | | | | | |
| Interfaces | RS485 / CAN / Pulse / EtherNet (Add an External Module) | | | | | |
| Feedback | Position / Speed / Current / Voltage / Temperature | | | | | |
| Operating Mode | Torque / Velocity / Position | | | | | |
| Safety Design | Overload Protection, Over/Low voltage Protection, Temperature Protection, ESD Protection, Torque / Velocity / Position Protection | | | | | |
| Materials | Aviation Aluminum, Steel | | | | | |
| Ambient Conditions | Operation 5 to 40°C, Storage 0 to 45°C, Humidity 20 to 75% (non-condensing) | | | | | |
| Protection Rating | IP30 | | | | | |


© 2022 Umbratek All Rights Reserved.

## HR-A063 Technical Data (L/S Type Flange Reducer)

| Ratio | 50:1 | | 80:1 | | 100:1 | |
|---|---|---|---|---|---|---|
| Reducer Type | Light Weight | High Strength | Light Weight | High Strength | Light Weight | High Strength |
| MAX Torque (N·m) | 34 | 35 | 43 | 56 | 54 | 70 |
| AVG Torque (N·m) | 26 | 34 | 27 | 35 | 39 | 51 |
| Rated Velocity (RPM) | 50 | | 31 | | 25 | |
| Inertia (kg·m$^2$) | 0.000028 | | | | | |
| Rated Current ($A_{RMS}$) | 5.0 | 5.3 | 4.0 | 5.0 | 3.9 | 5.0 |
| MAX Current ($A_{RMS}$) | 10.9 | 11.5 | 8.6 | 11.2 | 8.5 | 11.0 |
| Weight - Brake (g) | 1030 | 1250 | 1030 | 1250 | 1030 | 1250 |
| Weight - No Brake (g) | 900 | 1120 | 900 | 1120 | 900 | 1120 |
| Size (mm) | Motor d63, Flange D79, Height H94, Hole 7 | | | | | |
| Power Voltage | Rated DC48V (Operating Range DC19-52V) | | | | | |
| Backup Battery | 16bit Encoder Battery DC3V, 19bit Encoder Battery DC3.6V | | | | | |
| Standby Current | Driver < 35mA, Encoder Battery < 2.9uA | | | | | |
| Pole Pairs | 10 | | | | | |
| Backlash | ±0.007° (±25 Arcsec) | | | | | |
| Encoder & Resolution | Multi-turn Absolute Magnetic Encoder, 65536 x Ratio (16bit) / 524288 x Ratio (19bit) Pulse/Rev. | | | | | |
| Interfaces | RS485 / CAN / Pulse / EtherNet (Add an External Module) | | | | | |
| Feedback | Position / Speed / Current / Voltage / Temperature | | | | | |
| Operating Mode | Torque / Velocity / Position | | | | | |
| Safety Design | Overload Protection, Over/Low voltage Protection, Temperature Protection, ESD Protection, Torque / Velocity / Position Protection | | | | | |
| Materials | Aviation Aluminum, Steel | | | | | |
| Ambient Conditions | Operation 5 to 40°C, Storage 0 to 45°C, Humidity 20 to 75% (non-condensing) | | | | | |
| Protection Rating | IP30 | | | | | |


© 2022 Umbratek All Rights Reserved.

## HR-A072 Technical Data (L/S Type Flange Reducer)

| Ratio | 50:1 | | 80:1 | | 100:1 | | 120:1 | |
|---|---|---|---|---|---|---|---|---|
| Reducer Type | Light Weight | High Strength | Light Weight | High Strength | Light Weight | High Strength | Light Weight | High Strength |
| MAX Torque (N·m) | 50 | 50 | 74 | 80 | 82 | 100 | 87 | 110 |
| AVG Torque (N·m) | 34 | 44 | 47 | 61 | 49 | 64 | 49 | 64 |
| Rated Velocity (RPM) | 40 | | 25 | | 20 | | 17 | |
| Inertia (kg·m$^2$) | 0.000061 | | | | | | | |
| Rated Current ($A_{RMS}$) | 6.4 | 6.6 | 6.0 | 6.4 | 5.2 | 6.3 | 4.8 | 6.0 |
| MAX Current ($A_{RMS}$) | 15.6 | 15.8 | 14.6 | 15.5 | 12.7 | 15.4 | 11.5 | 14.6 |
| Weight - Brake (g) | 1450 | 1790 | 1450 | 1790 | 1450 | 1790 | 1450 | 1790 |
| Weight - No Brake (g) | 1275 | 1615 | 1275 | 1615 | 1275 | 1615 | 1275 | 1615 |
| Size (mm) | Motor d72, Flange D93, Height H101, Hole 10 | | | | | | | |
| Power Voltage | Rated DC48V (Operating Range DC19-52V) | | | | | | | |
| Backup Battery | 16bit Encoder Battery DC3V, 19bit Encoder Battery DC3.6V | | | | | | | |
| Standby Current | Driver < 35mA, Encoder Battery < 2.9uA | | | | | | | |
| Pole Pairs | 10 | | | | | | | |
| Backlash | ±0.007° (±25 Arcsec) | | | | | | | |
| Encoder & Resolution | Multi-turn Absolute Magnetic Encoder, 65536 x Ratio (16bit) / 524288 x Ratio (19bit) Pulse/Rev. | | | | | | | |
| Interfaces | RS485 / CAN / Pulse / EtherNet (Add an External Module) | | | | | | | |
| Feedback | Position / Speed / Current / Voltage / Temperature | | | | | | | |
| Operating Mode | Torque / Velocity / Position | | | | | | | |
| Safety Design | Overload Protection, Over/Low voltage Protection, Temperature Protection, ESD Protection, Torque / Velocity / Position Protection | | | | | | | |
| Materials | Aviation Aluminum, Steel | | | | | | | |
| Ambient Conditions | Operation 5 to 40°C, Storage 0 to 45°C, Humidity 20 to 75% (non-condensing) | | | | | | | |
| Protection Rating | IP30 | | | | | | | |


© 2022 Umbratek All Rights Reserved.

## HR-A086 Technical Data (L/S Type Flange Reducer)

| Ratio | 50:1 | | 80:1 | | 100:1 | | 120:1 | | 160:1 | |
|---|---|---|---|---|---|---|---|---|---|---|
| Reducer Type | Light Weight | High Strength | Light Weight | High Strength | Light Weight | High Strength | Light Weight | High Strength | Light Weight | High Strength |
| MAX Torque (N·m) | 98 | 100 | 137 | 160 | 157 | 200 | 167 | 217 | 176 | 229 |
| AVG Torque (N·m) | 55 | 72 | 87 | 113 | 108 | 140 | 108 | 140 | 108 | 140 |
| Rated Velocity (RPM) | 40 | | 25 | | 20 | | 17 | | 13 | |
| Inertia (kg·m$^2$) | 0.000181 | | | | | | | | | |
| Rated Current ($A_{RMS}$) | 12.5 | 13.0 | 10.9 | 12.7 | 10.0 | 12.6 | 9.0 | 11.7 | 7.0 | 9.0 |
| MAX Current ($A_{RMS}$) | 30.1 | 31.7 | 26.6 | 31.0 | 24.2 | 31.0 | 22.0 | 28.5 | 17.1 | 22.2 |
| Weight - Brake (g) | 2800 | 3200 | 2800 | 3200 | 2800 | 3200 | 2800 | 3200 | 2800 | 3200 |
| Weight - No Brake (g) | 2500 | 2900 | 2500 | 2900 | 2500 | 2900 | 2500 | 2900 | 2500 | 2900 |
| Size (mm) | Motor d86, Flange D107, Height H136, Hole 10 | | | | | | | | | |
| Power Voltage | Rated DC48V (Operating Range DC38-52V) | | | | | | | | | |
| Backup Battery | 16bit Encoder Battery DC3V, 19bit Encoder Battery DC3.6V | | | | | | | | | |
| Standby Current | Driver < 35mA, Encoder Battery < 2.9uA | | | | | | | | | |
| Pole Pairs | 10 | | | | | | | | | |
| Backlash | ±0.007° (±25 Arcsec) | | | | | | | | | |
| Encoder & Resolution | Multi-turn Absolute Magnetic Encoder, 65536 x Ratio (16bit) / 524288 x Ratio (19bit) Pulse/Rev. | | | | | | | | | |
| Interfaces | RS485 / CAN / Pulse / EtherNet (Add an External Module) | | | | | | | | | |
| Feedback | Position / Speed / Current / Voltage / Temperature | | | | | | | | | |
| Operating Mode | Torque / Velocity / Position | | | | | | | | | |
| Safety Design | Overload Protection, Over/Low voltage Protection, Temperature Protection, ESD Protection, Torque / Velocity / Position Protection | | | | | | | | | |
| Materials | Aviation Aluminum, Steel | | | | | | | | | |
| Ambient Conditions | Operation 5 to 40°C, Storage 0 to 45°C, Humidity 20 to 75% (non-condensing) | | | | | | | | | |
| Protection Rating | IP30 | | | | | | | | | |


© 2022 Umbratek All Rights Reserved.

## HR-A113 Technical Data (L/S Type Flange Reducer)

| Ratio | 50:1 | | 80:1 | | 100:1 | | 120:1 | | 160:1 | |
|---|---|---|---|---|---|---|---|---|---|---|
| Reducer Type | Light Weight | High Strength | Light Weight | High Strength | Light Weight | High Strength | Light Weight | High Strength | Light Weight | High Strength |
| MAX Torque (N·m) | 210 | 210 | 304 | 330 | 333 | 420 | 353 | 450 | 372 | 480 |
| AVG Torque (N·m) | 108 | 140 | 167 | 217 | 216 | 281 | 216 | 281 | 216 | 281 |
| Rated Velocity (RPM) | 30 | | 19 | | 15 | | 13 | | 10 | |
| Inertia (kg·m$^2$) | 0.000546 | | | | | | | | | |
| Rated Current ($A_{RMS}$) | 18.5 | 18.5 | 16.5 | 17.9 | 14.0 | 17.6 | 13.0 | 16.5 | 10.5 | 13.5 |
| MAX Current ($A_{RMS}$) | 53.5 | 53.5 | 50.0 | 52.5 | 41.9 | 52.0 | 38.4 | 49.0 | 31.0 | 40.2 |
| Weight - Brake (g) | 4800 | 5800 | 4800 | 5800 | 4800 | 5800 | 4800 | 5800 | 4800 | 5800 |
| Weight - No Brake (g) | 4400 | 5400 | 4400 | 5400 | 4400 | 5400 | 4400 | 5400 | 4400 | 5400 |
| Size (mm) | Motor d113, Flange D138, Height H147, Hole 10 | | | | | | | | | |
| Power Voltage | Rated DC48V (Operating Range DC38-52V) | | | | | | | | | |
| Backup Battery | 19bit Encoder Battery DC3.6V | | | | | | | | | |
| Standby Current | Driver < 35mA, Encoder Battery < 2.9uA | | | | | | | | | |
| Pole Pairs | 14 | | | | | | | | | |
| Backlash | ±0.007° (±25 Arcsec) | | | | | | | | | |
| Encoder & Resolution | Multi-turn Absolute Magnetic Encoder, 524288 x Ratio (19bit) Pulse/Rev. | | | | | | | | | |
| Interfaces | RS485 / CAN / Pulse / EtherNet (Add an External Module) | | | | | | | | | |
| Feedback | Position / Speed / Current / Voltage / Temperature | | | | | | | | | |
| Operating Mode | Torque / Velocity / Position | | | | | | | | | |
| Safety Design | Overload Protection, Over/Low voltage Protection, Temperature Protection, ESD Protection, Torque / Velocity / Position Protection | | | | | | | | | |
| Materials | Aviation Aluminum, Steel | | | | | | | | | |
| Ambient Conditions | Operation 5 to 40°C, Storage 0 to 45°C, Humidity 20 to 75% (non-condensing) | | | | | | | | | |
| Protection Rating | IP30 | | | | | | | | | |


© 2022 Umbratek All Rights Reserved.

## HR-A055/A062/A071 Technical Data (C Type Compact Reducer)

| Model | HR-A055 | | HR-A062 | | HR-A071 | |
|---|---|---|---|---|---|---|
| Reducer Type | Compact Type, Non-hollow and Flange | | | | | |
| Ratio | 50:1 | 100:1 | 50:1 | 100:1 | 50:1 | 100:1 |
| MAX Torque (N·m) | 12 | 19 | 23 | 37 | 39 | 57 |
| AVG Torque (N·m) | 4.8 | 7.7 | 18 | 27 | 24 | 34 |
| Rated Velocity (RPM) | 70 | 35 | 52 | 26 | 44 | 22 |
| Rated Current ($A_{RMS}$) | 1.1 | 1.4 | 1.9 | 2.8 | 3.3 | 4.1 |
| MAX Current ($A_{RMS}$) | 2.2 | 3.2 | 4.2 | 6.3 | 7.2 | 9.3 |
| Inertia (kg·m$^2$) | 0.000014 | | 0.000028 | | 0.000061 | |
| Weight - Brake (g) | 770 | | 1000 | | 1415 | |
| Weight - No Brake (g) | 675 | | 870 | | 1240 | |
| Size D x H (mm) | 55 x 80 | | 62 x 86 | | 71 x 96 | |
| Pole Pairs | 7 | | 10 | | 10 | |
| Power Voltage | Rated DC48V (Operating Range DC38-52V) | | | | | |
| Backup Battery | 16bit Encoder Battery DC3V, 19bit Encoder Battery DC3.6V | | | | | |
| Standby Current | Driver < 35mA, Encoder Battery < 2.9uA | | | | | |
| Backlash | ±0.007° (±25 Arcsec) | | | | | |
| Encoder & Resolution | Multi-turn Absolute Magnetic Encoder, 65536 x Ratio (16bit) / 524288 x Ratio (19bit) Pulse/Rev. | | | | | |
| Interfaces | RS485 / CAN / Pulse / EtherNet (Add an External Module) | | | | | |
| Feedback | Position / Speed / Current / Voltage / Temperature | | | | | |
| Operating Mode | Torque / Velocity / Position | | | | | |
| Safety Design | Overload Protection, Over/Low voltage Protection, Temperature Protection, ESD Protection, Torque / Velocity / Position Protection | | | | | |
| Materials | Aviation Aluminum, Steel | | | | | |
| Ambient Conditions | Operation 5 to 40°C, Storage 0 to 45°C, Humidity 20 to 75% (non-condensing) | | | | | |
| Protection Rating | IP30 | | | | | |


© 2022 Umbratek All Rights Reserved.

## DD-A Series Technical Data (Direct Drive Actuator)

| Model | A055 | A056 | A062 | A063 | A071 | A072 | A085 | A086 | A112 | A113 |
|---|---|---|---|---|---|---|---|---|---|---|
| MAX Torque (N·m) | 1.10 | | 2.50 | | 2.70 | | 5.90 | | 8.35 | |
| AVG Torque (N·m) | 0.35 | | 0.70 | | 1.00 | | 2.50 | | 4.80 | |
| Rated Velocity (RPM) | 3500 | | 2600 | | 2200 | | 2000 | | 1500 | |
| Inertia (kg·m$^2$) | 0.000012 | | 0.000023 | | 0.000049 | | 0.000150 | | 0.000437 | |
| Rated Current ($A_{RMS}$) | 2.3 | | 5.0 | | 6.3 | | 12.6 | | 19.0 | |
| MAX Current ($A_{RMS}$) | 5.3 | | 11.0 | | 15.4 | | 30.8 | | 52.7 | |
| Torque Constant (N·m / A) | 0.0743 | | 0.106 | | 0.109 | | 0.148 | | 0.128 | |
| Pole Pairs | 7 | | 10 | | 10 | | 10 | | 14 | |
| Weight - Brake (g) | 417 | 420 | 540 | 539 | 763 | 765 | 1667 | 1680 | 2487 | 2500 |
| Weight - No Brake (g) | 322 | 325 | 410 | 409 | 588 | 590 | 1377 | 1390 | 2097 | 2110 |
| Size (mm) | d55 H57 | d56/D73 H54 | d62 H62 | d63/D79 H58 | d71 H68 | d72/D93 H64 | d85 H95 | d86/D107 H90 | d112 H96.3 | d113/D138 H91 |
| Hole Diameter (mm) | 7 | | 7 | | 10 | | 10 | | 10 | |
| Axial/Radial Load (kN) | 1.26/1.26 | | 1.26/1.26 | | 2.47/2.47 | | 2.95/2.95 | | 2.95/2.95 | |
| Power Voltage | Rated DC48V (Range DC19-52V) | | | | | | Rated DC48V (Range DC38-52V) | | | |
| Backup Battery | 16bit Encoder Battery DC3V, 19bit Encoder Battery DC3.6V | | | | | | | | | |
| Standby Current | Driver < 35mA, Encoder Backup Battery < 2.9uA | | | | | | | | | |
| Encoder & Resolution | Multi-turn Absolute Magnetic Encoder, 65536 (16bit) / 524288 (19bit) Pulse/Rev. | | | | | | | | | |
| Interfaces | RS485 / CAN / Pulse / EtherNet (Add an External Module) | | | | | | | | | |
| Feedback | Position / Speed / Current / Voltage / Temperature | | | | | | | | | |
| Operating Mode | Torque / Velocity / Position | | | | | | | | | |
| Safety Design | Overload Protection, Over/Low voltage Protection, Temperature Protection, ESD Protection, Torque / Velocity / Position Protection | | | | | | | | | |
| Materials | Aviation Aluminum, Steel | | | | | | | | | |
| Ambient Conditions | Operation 5 to 40°C, Storage 0 to 45°C, Humidity 20 to 75% (non-condensing) | | | | | | | | | |
| Protection Rating | IP30 | | | | | | | | | |


© 2022 Umbratek All Rights Reserved.

# Dimension

## ADRA HR-A056 Dimension (Unit: mm)

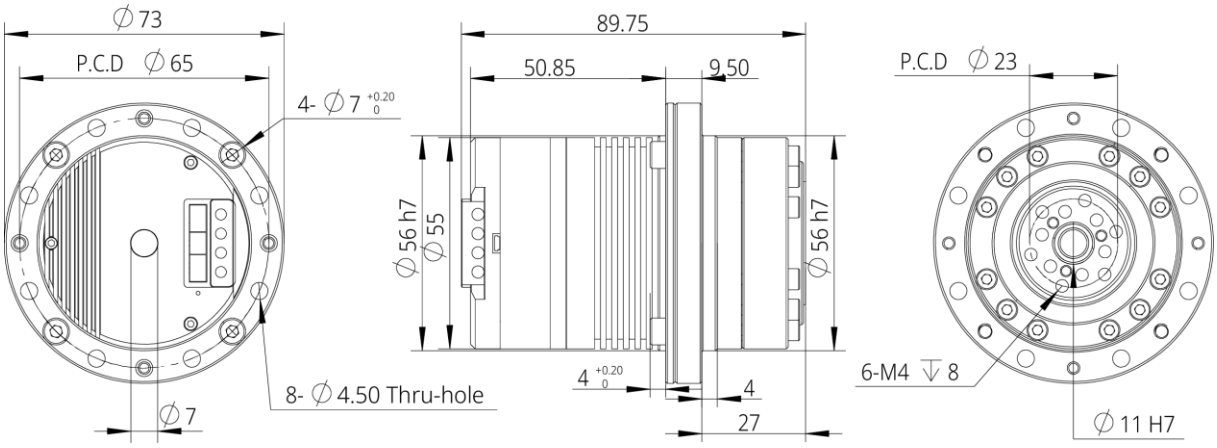


## ADRA HR-A063 Dimension (Unit: mm)

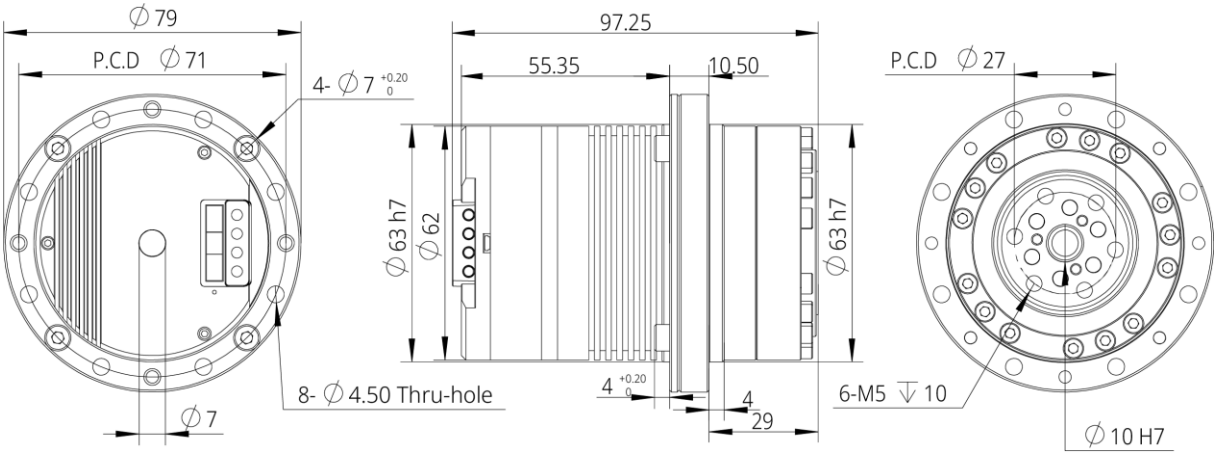


## ADRA HR-A072 Dimension (Unit: mm)

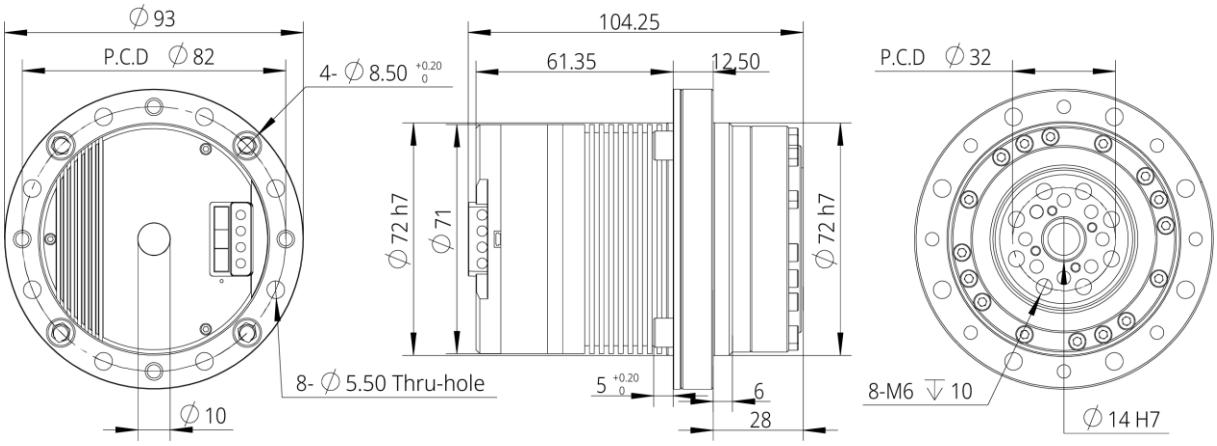



© 2022 Umbratek All Rights Reserved.

## ADRA HR-A086 Dimension (Unit: mm)

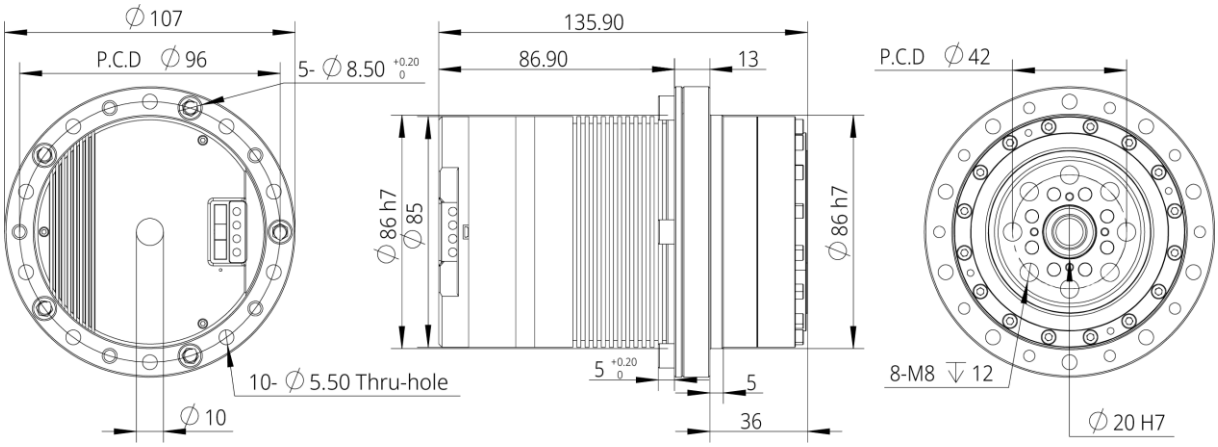


## ADRA HR-A113 Dimension (Unit: mm)

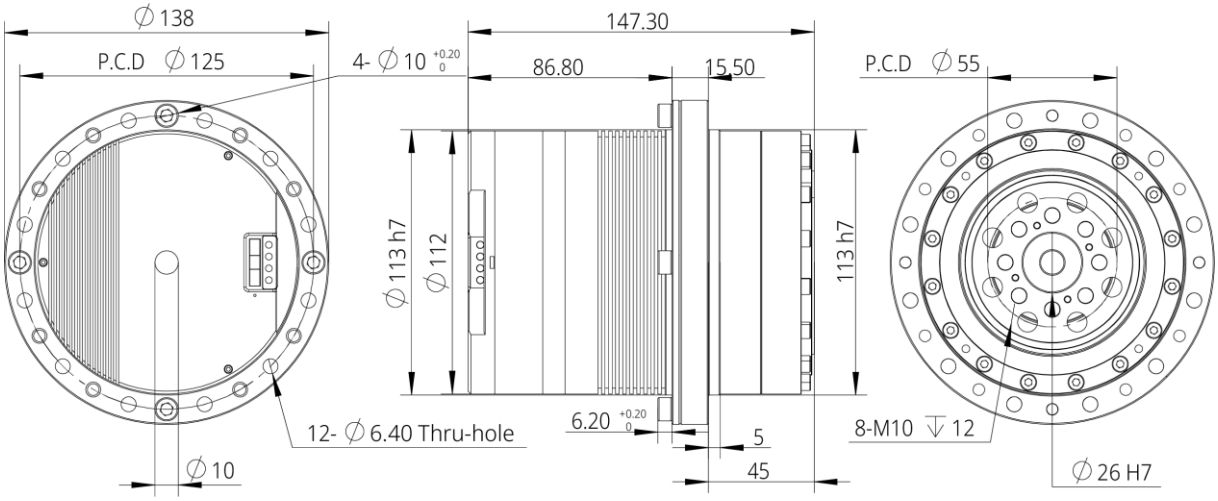



© 2022 Umbratek All Rights Reserved.

## ADRA HR-A055 Dimension (Unit: mm)

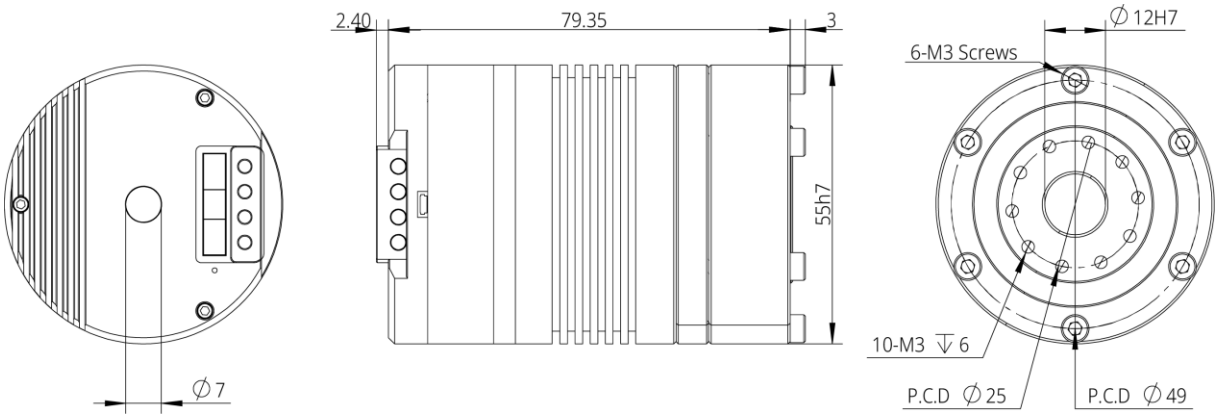


## ADRA HR-A062 Dimension (Unit: mm)

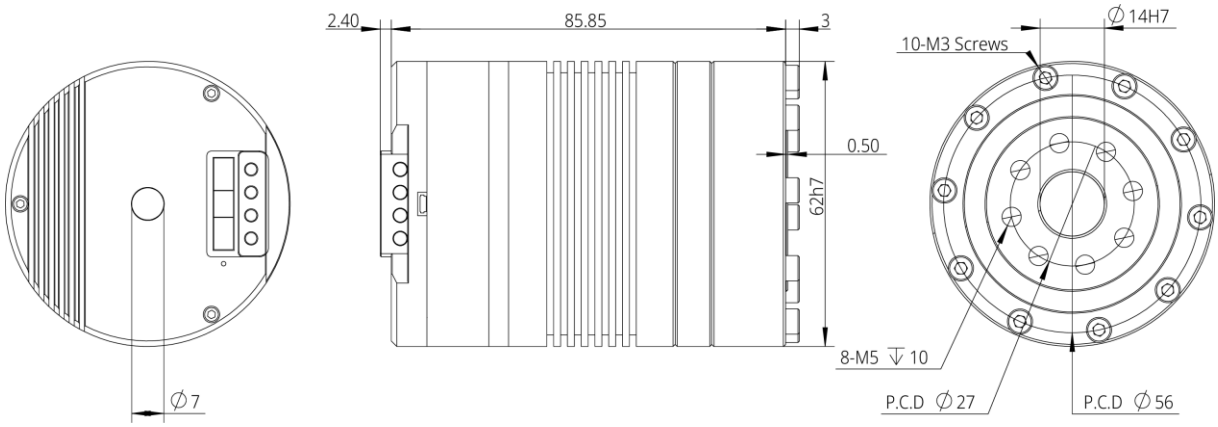


## ADRA HR-A071 Dimension (Unit: mm)

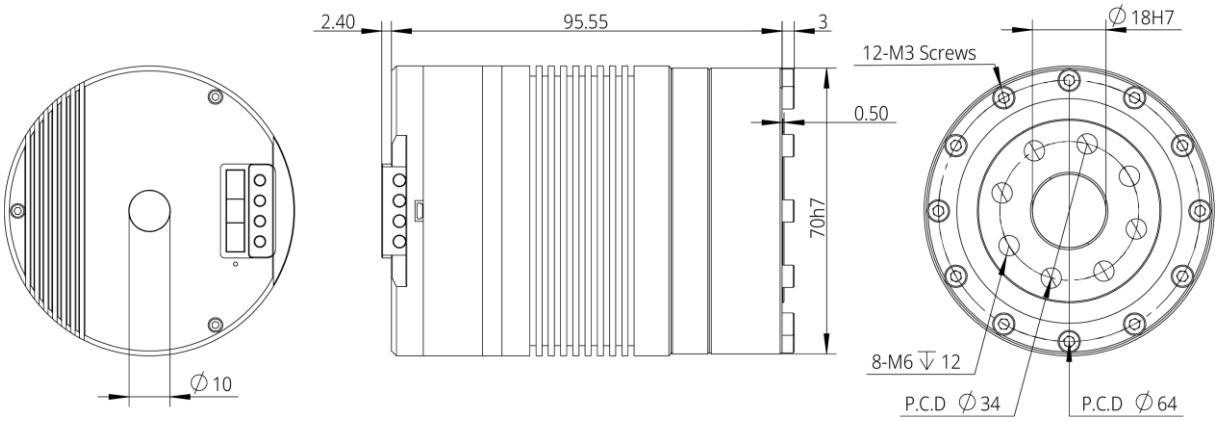



© 2022 Umbratek All Rights Reserved.

## ADRA DD-A056 Dimension (单位：mm)

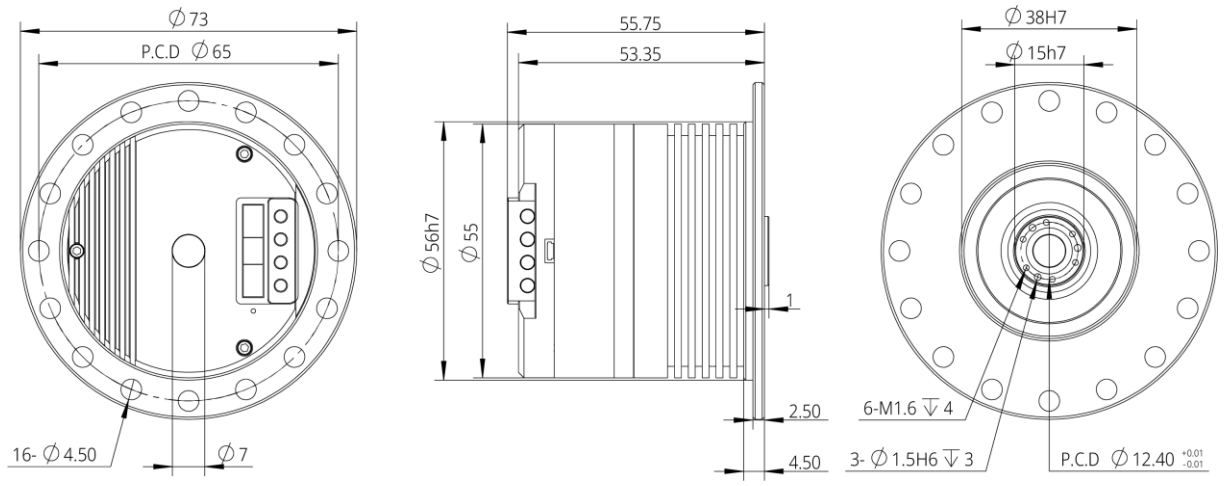


## ADRA DD-A063 Dimension (Unit: mm)

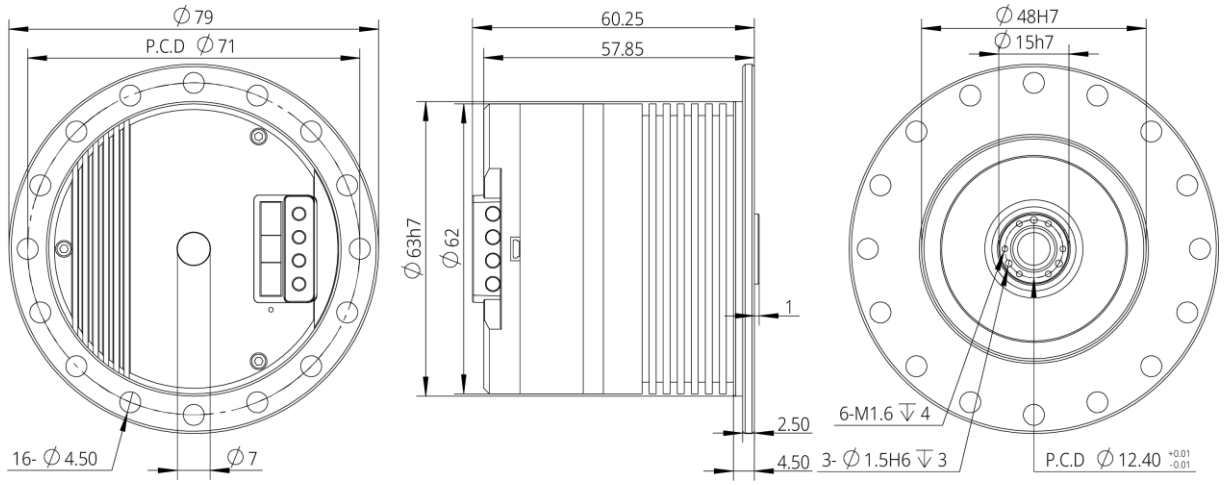


## ADRA DD-A072 Dimension (Unit: mm)

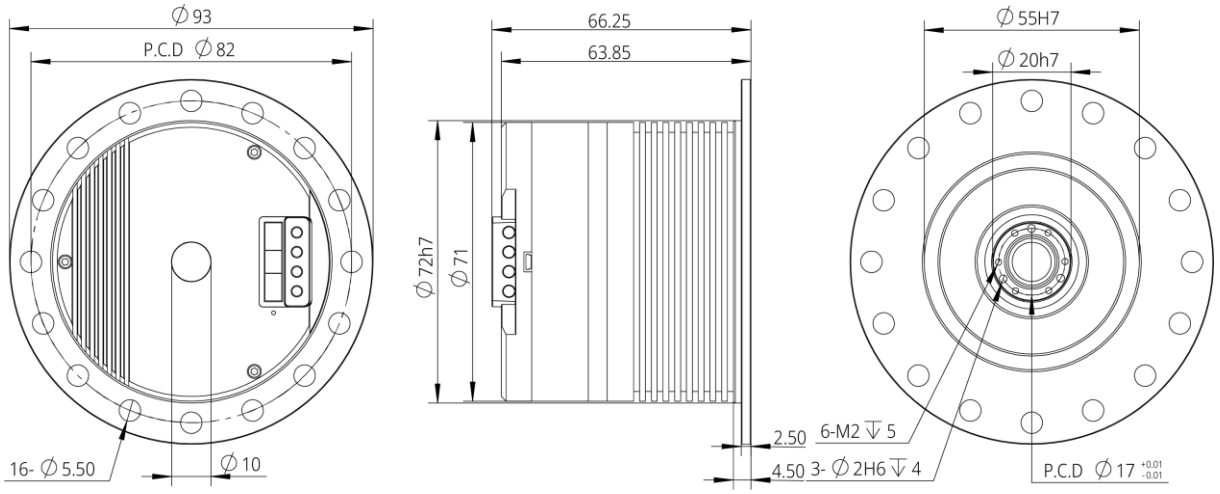



© 2022 Umbratek All Rights Reserved.

## ADRA DD-A086 Dimension (Unit: mm)

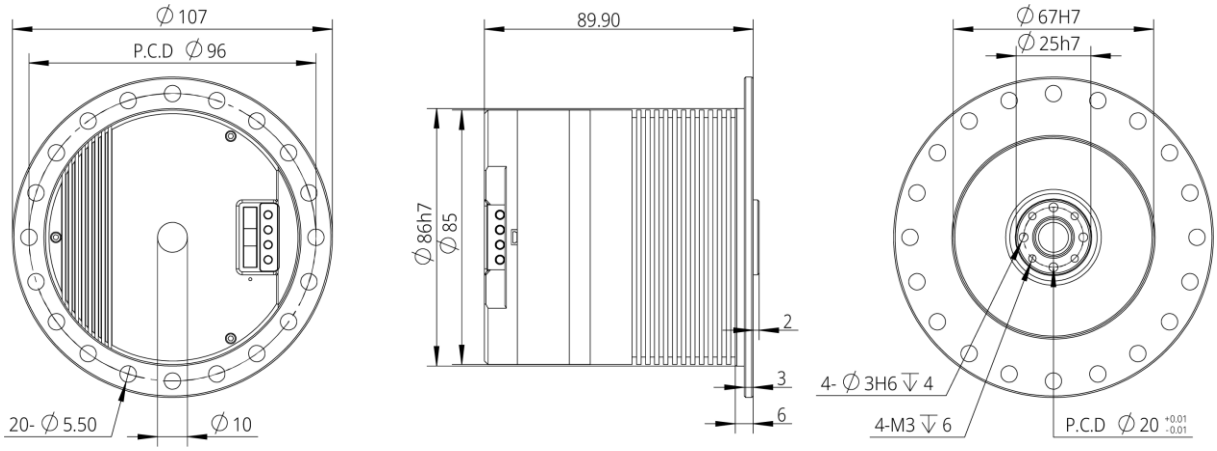


## ADRA DD-A113 Dimension (Unit: mm)

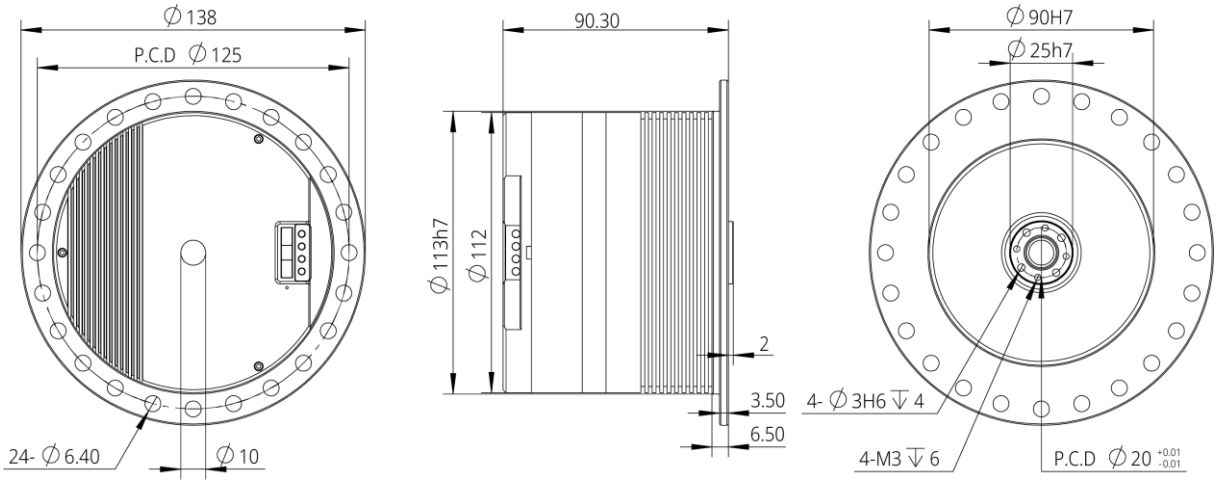



© 2022 Umbratek All Rights Reserved.

## ADRA DD-A055 Dimension (Unit: mm)

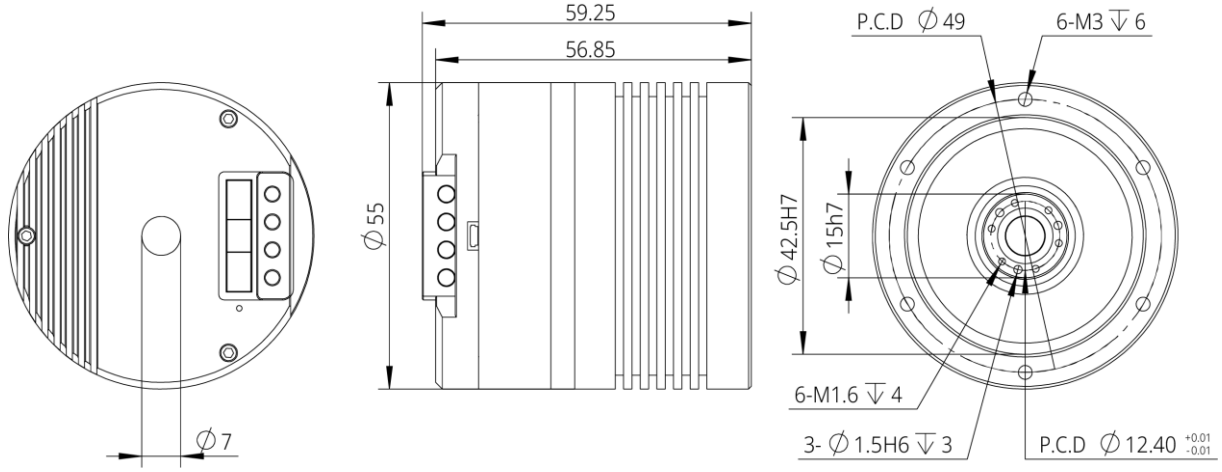


## ADRA DD-A062 Dimension (Unit: mm)

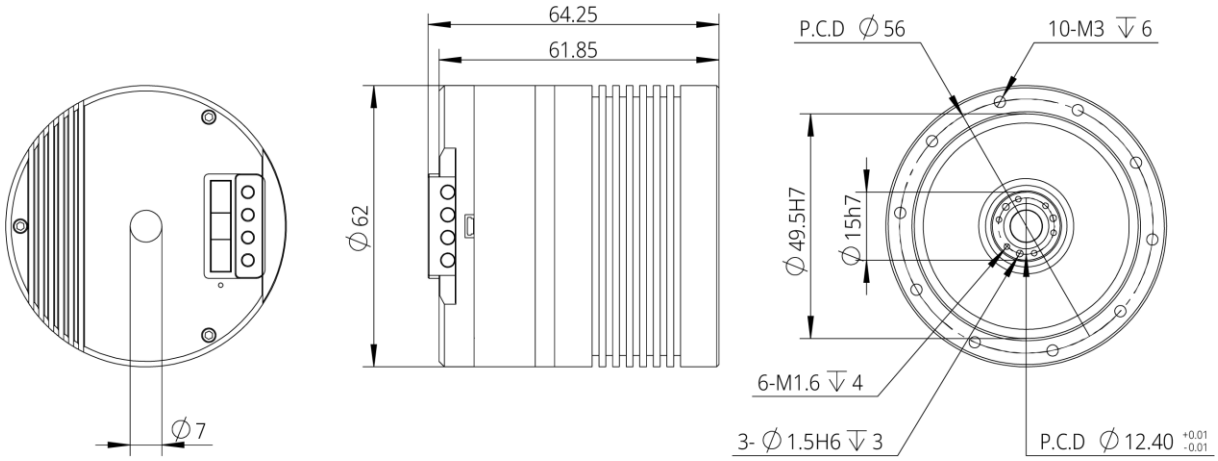


## ADRA DD-A071 Dimension (Unit: mm)

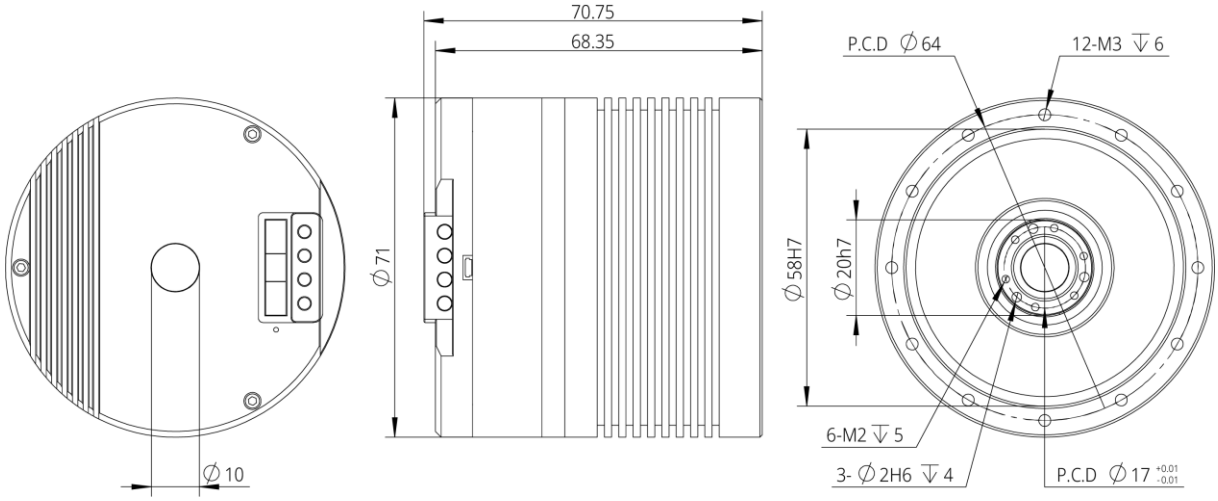



© 2022 Umbratek All Rights Reserved.

## ADRA DD-A085 Dimension (Unit: mm)

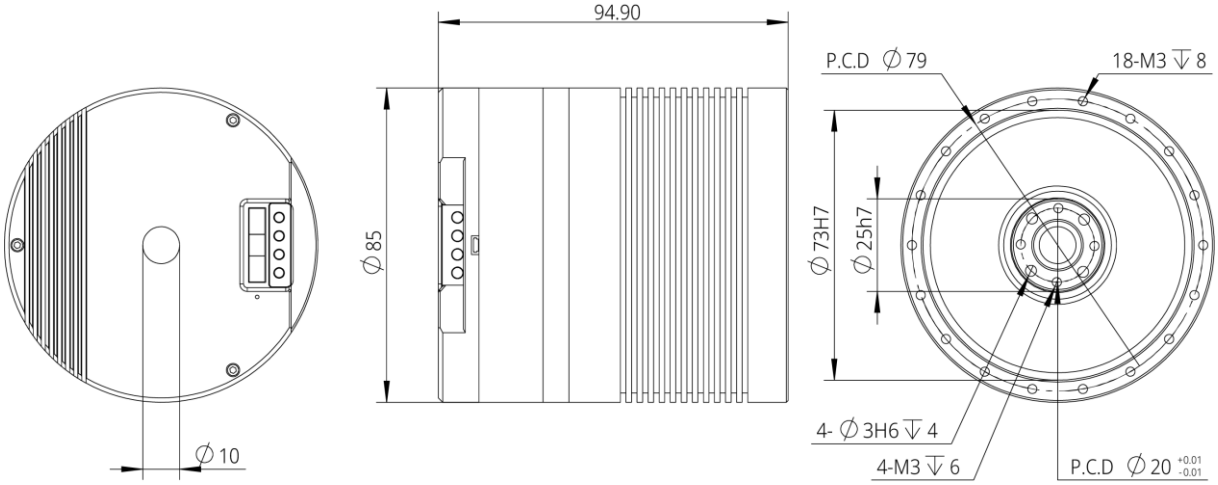


## ADRA DD-A112 Dimension (Unit: mm)

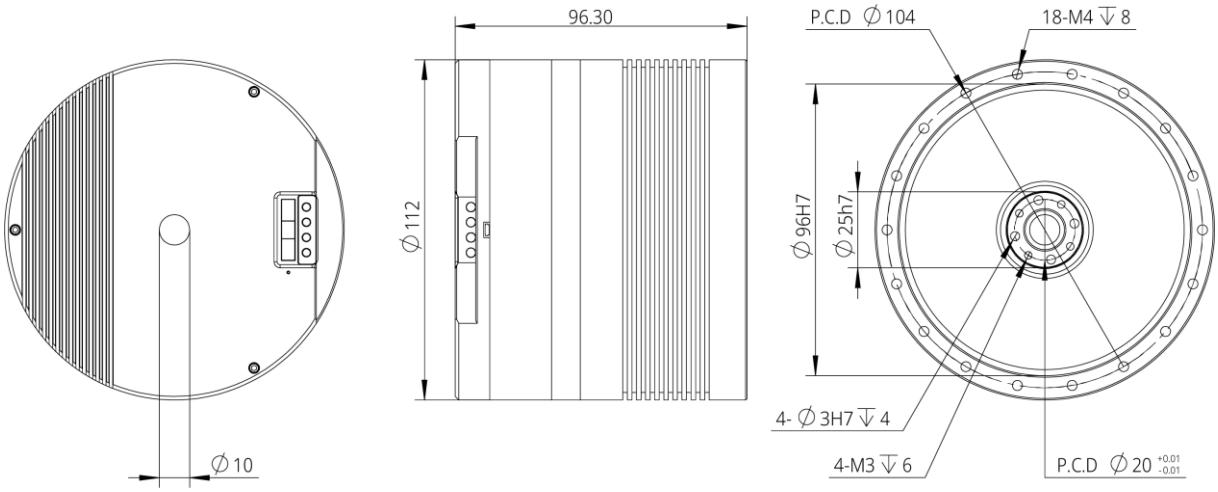



© 2022 Umbratek All Rights Reserved.

Copyright © 2022 Umbratek All Rights Reserved.


© 2022 Umbratek All Rights Reserved.